WarmmFloors Models

Model Selections
Installation Procedures and Guidelines
Start Up Procedures

3

CITO Products, Inc. • N8779 Hwy X • P.O. Box 90 • Watertown, Wisconsin 53094 • USA
Phone: (920) 261-3390 • Fax: (920) 261-1350 • E-mail: sales@WarmmFloors.com • www.WarmmFloors.com

Model Selections

Single Zone 1" Residential 4, 6 or 8 Loops 5/8" OD - Tubing Down

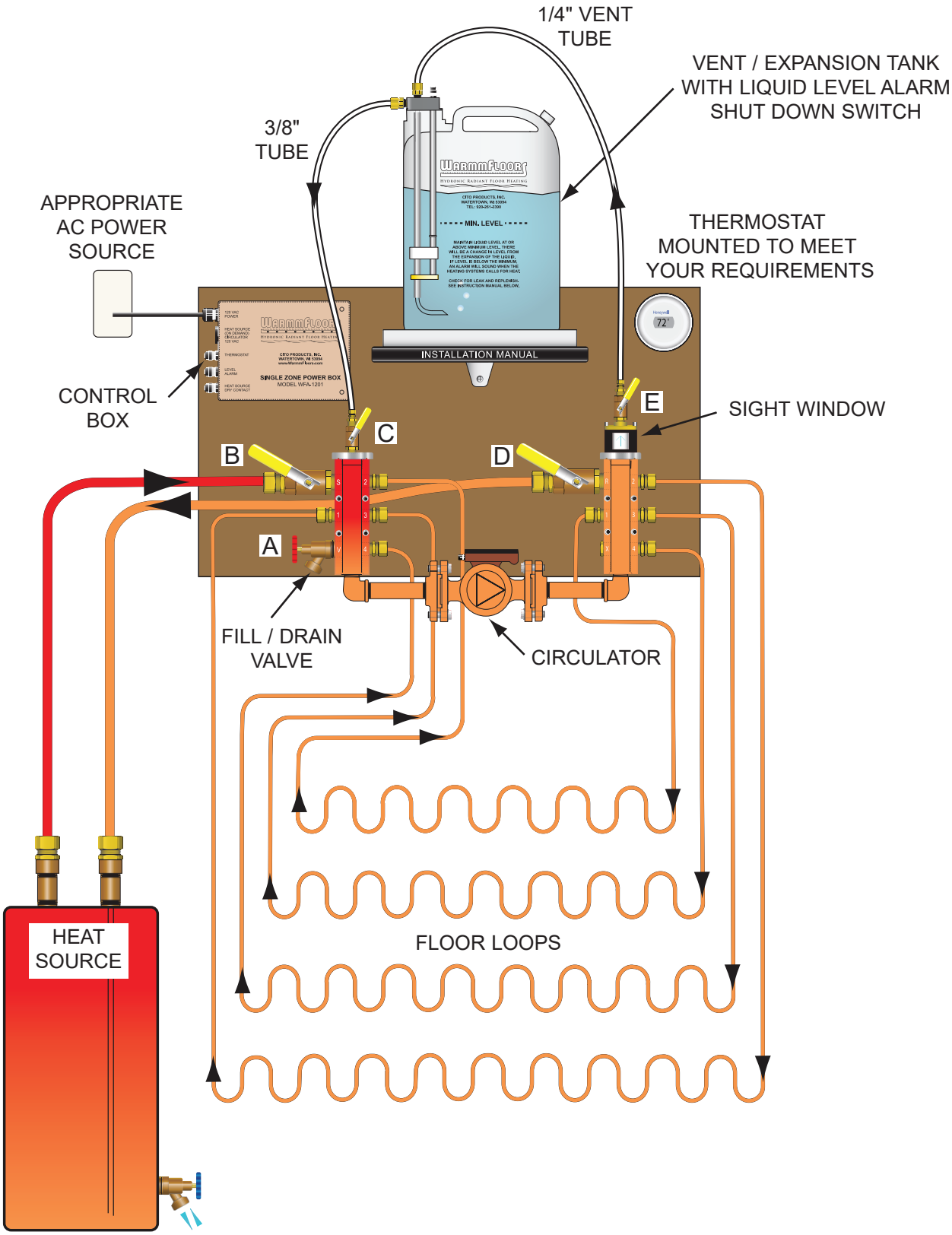

[WF-1201 or WF-2201 Single Zone Power Box - Heat Only]
[WF-1212 or WF-2212 Single Zone - Heating Only - Electrical Schematic]
[WF-1214 or WF-2214 Single Zone - Heating Only Diagram]
[WF-1216 or WF-2216 Single Zone - Heating Only Hook-Up]

Start Up Procedure # 1

1. Connect water supply hose to the 3/4" Fill / Drain Valve “A”. ***(If using Glycol, see page 4-4).***
2. Open all Hand Valves including: B / C / D / E
3. Open Fill Valve “A” to force water into the system until water reaches level line in Vent Tank.
4. Close Fill Valve “A”.
5. Loosen the end cap on the Circulator until water is dripping from the bottom of the plug. Close the end cap. *(This provides lubrication for the bearings and cooling for the motor).*
6. **Connect appropriate AC power to Control Box (WFA-1201 120 VAC)(WFA-2201 220 VAC)**
7. Open Fill Valve “A” to replenish water in the Tank.
8. Monitor progress by viewing the air moving through the Sight Window until the Circulator is quiet and all grumbling has stopped.

   NOTE: TO ACCELERATE THE PURGING PROCESS, SEE FILLING / PURGING ON PAGE 4-2.

   After the air has been eliminated (Circulator has stopped all grumbling noise and the liquid level has remained constant) the Thermostat is ready to be connected.

9. Connect the Thermostat to the Control Box.

   CHECK CONTROLS FOR PROPER OPERATION.

10. Set the temperature higher than room temperature. *(This will supply the 120 volt or 220 volt to the Circulator).*
11. To check Level Alarm, pull the Tank Top Cover Assembly up and lift Float above liquid level. Audio Alarm will sound and the Circulator will shut off *(for self protection)*.
12. Set heat source temperature limit switch to the lowest temperature that meets your heat load (for best efficiency).

    After system operation has been established, the water treatment must be added. ***See page 4-3.***

13. Set the Thermostat to desired room temperature and you will have Happy Warm Feet and lots of Warm Water.

Single Zone 1" Residential 4, 6 or 8 Loops 5/8" OD - Tubing Up

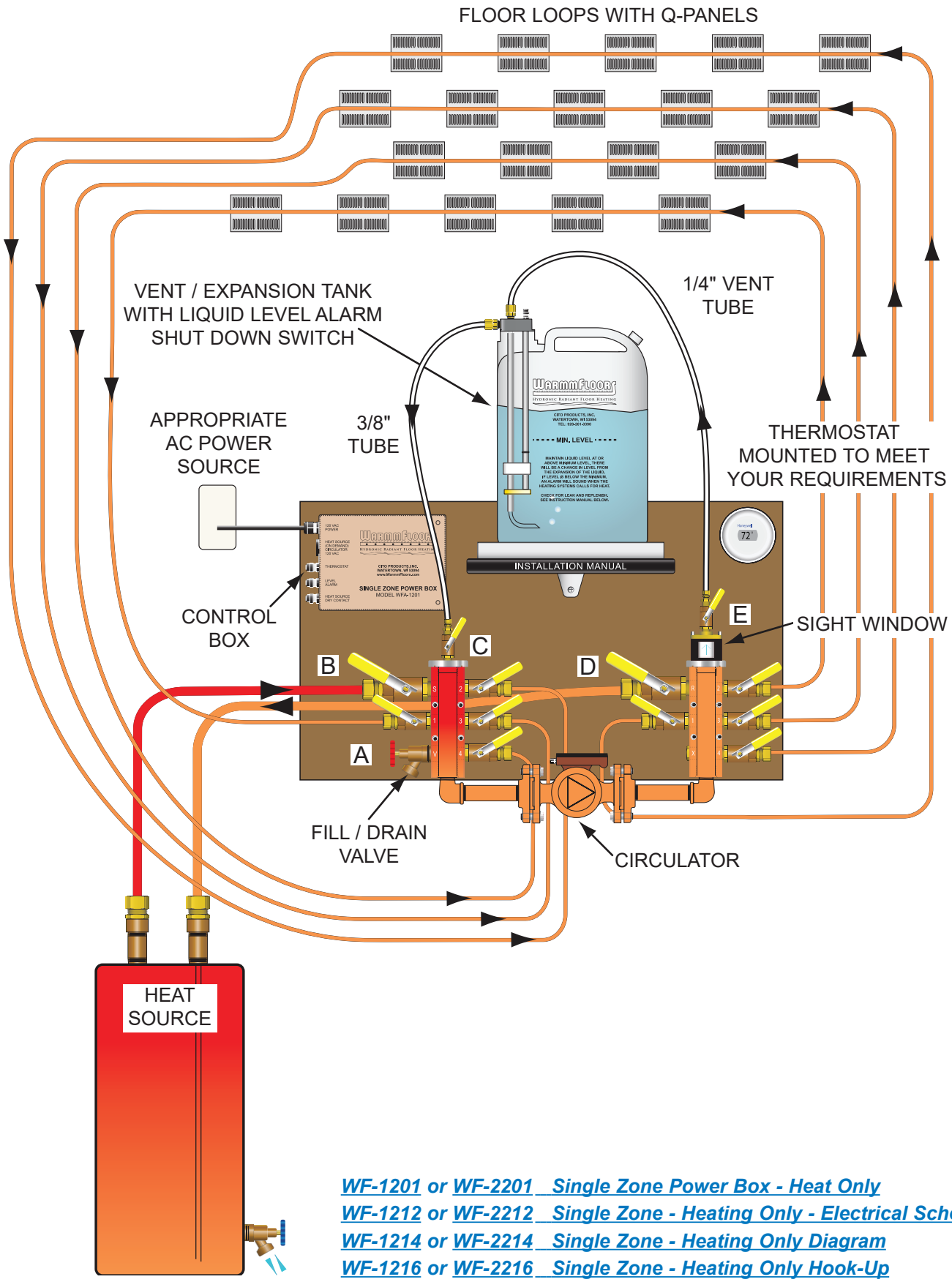

WF-1201 or WF-2201 Single Zone Power Box - Heat Only
WF-1212 or WF-2212 Single Zone - Heating Only - Electrical Schematic
WF-1214 or WF-2214 Single Zone - Heating Only Diagram
WF-1216 or WF-2216 Single Zone - Heating Only Hook-Up

Start Up Procedure # 2

1. Connect water supply hose to the 3/4" Fill / Drain Valve “A”. ***(If using Glycol, see page 4-4).***
2. Open all Hand Valves including: B / C / D / E
3. Open Fill Valve “A” to force water into the system until water reaches level line in Vent Tank.
4. Close Fill Valve “A” and all floor loop Hand Valves.
5. Loosen the end cap on the Circulator until water is dripping from the bottom of the plug. Close the end cap *(This provides lubrication for the bearings and cooling for the motor).*
6. **Connect appropriate AC power to Control Box (WFA-1201 120 VAC)(WFA-2201 220 VAC)**
7. Open one loop with it’s corresponding Hand Valves, one at a time to purge air from the loop.
8. Open Fill valve “A” to replenish water in the Tank.
9. Monitor progress by viewing air moving through the Sight Window. When the Circulator is quiet and all grumbling has stopped, close Hand valves and proceed with the next loop.

   NOTE: TO ACCELERATE THE PURGING PROCESS, SEE FILLING / PURGING ON PAGE 4-2.

10. After air has been purged, open all Hand Valves.

    After the air has been eliminated (Circulator has stopped all grumbling noise and the liquid level has remained constant) the Thermostat is ready to be connected.

11. Connect the Thermostat to the Control Box.
12. ***CHECK CONTROLS FOR PROPER OPERATION.***
13. Set the temperature higher than room temperature. (This will supply the 120 volt or 220 volt AC to the circulator).
14. To check Level Alarm, pull the Tank Top Cover Assembly up and lift Float above liquid level. Audio Alarm will sound and the Circulator will shut off *(for self protection)*.
15. Set heat source temperature limit switch to the lowest temperature that meets your heat load (for best efficiency).

    After system operation has been established, the water treatment must be added. ***See page 4-3.***

16. Set the Thermostat(s) to desired room temperature and you will have Happy Warm Feet and lots of Warm Water.

Single Zone 1" Residential 4, 6 or 8 Loops 5/8" OD - DHW - Tubing Up

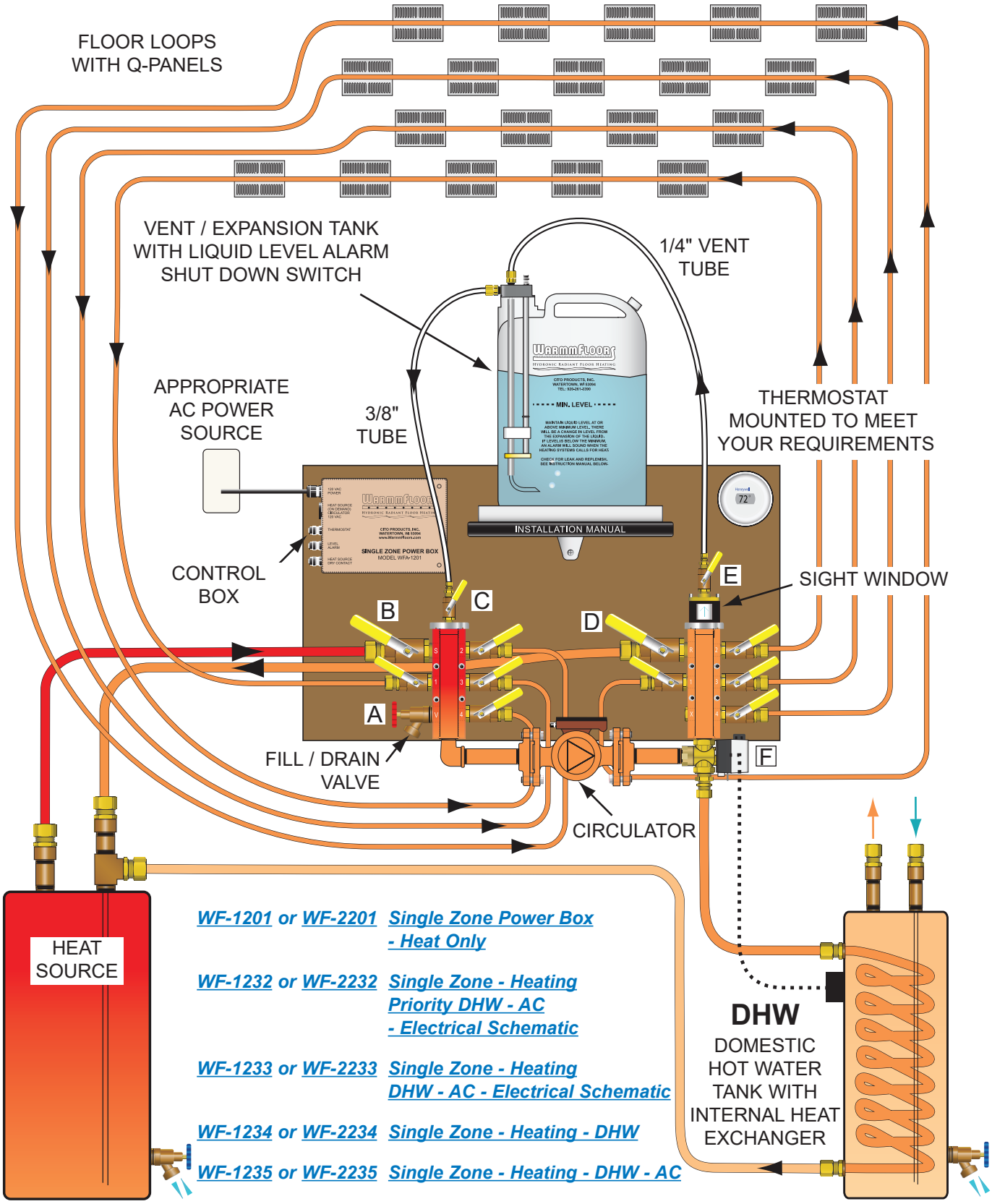

WF-1201* or *WF-2201 ***Single Zone Power Box - Heat Only***

WF-1232* or *WF-2232 ***Single Zone - Heating Priority DHW - AC - Electrical Schematic***

WF-1233* or *WF-2233 ***Single Zone - Heating DHW - AC - Electrical Schematic***

WF-1234* or *WF-2234 ***Single Zone - Heating - DHW***

WF-1235* or *WF-2235 ***Single Zone - Heating - DHW - AC***

WF-1236* or *WF-2236 ***Single Zone - Heating Priority DHW - AC Hook-Up***

WF-1237* or *WF-2237 ***Single Zone - Heating - DHW - AC***

Start Up Procedure # 3

1. Connect water supply hose to the 3/4" Fill / Drain Valve “A”. ***(If using Glycol, see page 4-4).***
2. Open all Hand Valves including: B / C / D / E
3. Open Fill Valve “A” to force water into the system until water reaches level line in Vent Tank.
4. Close Fill Valve “A” and all floor loop Hand Valves.
5. Loosen the end cap on Circulator until water is dripping from the bottom of the plug.
   Close the end cap *(This provides lubrication for the bearings and cooling for the motor).*
6. **Connect appropriate AC power to Control Box (WFA-1201 120 VAC)(WFA-2201 220 VAC)**
7. Open one loop with it’s corisponding Hand Valves, one at a time to purge air from the loop.
8. Open Fill Valve “A” to replenish Water in the Tank.
9. Monitor progress by viewing air moving through the Sight Window.
   When the Circulator is quiet and all grumbling has stopped,
   close Hand Valves and proceed with next loop.
   Once all loops are purged, all floor loops should be closed.

   NOTE: TO ACCELERATE THE PURGING PROCESS, SEE FILLING / PURGING ON PAGE 4-2.

10. Open Zone Valve “F” to fill DHW loop. (Latch Zone Valve with lever in open position).
11. After air has been purged, open all Hand Valves and unlatch Zone Valve “F”.

    After the air has been eliminated (Circulator has stopped all grumbling noise and the liquid level has remained constant) the Thermostat is ready to be connected.

12. Connect the Thermostat to the Control Box.

    CHECK CONTROLS FOR PROPER OPERATION.

13. Set the temperature higher than room temperature.
    (This will supply the 120 volt or 220 volt AC to the Circulator).
14. To check Level Alarm, pull the Tank Top Cover Assembly up and lift Float above liquid level.
    Audio Alarm will sound and the Circulator will shut off *(for self protection)*.
15. Set heat source temperature limit switch to the lowest temperature that meets your heat load (for best efficiency).
16. Set DHW to desired temperature (must be lower than system heat source temp).
    (When DHW temperature is lower then set point, all WarmmFloor heating will be disabled to provide Priority Hot Water heating).

    After system operation has been established, the water treatment must be added.
    See page 4-3.

17. Set the Thermostat(s) to desired room temperature and you will have Happy Warm Feet.

Multiple Single Zone 1" Residential 4, 6 or 8 Loops 5/8" OD - DHW - Tubing Up

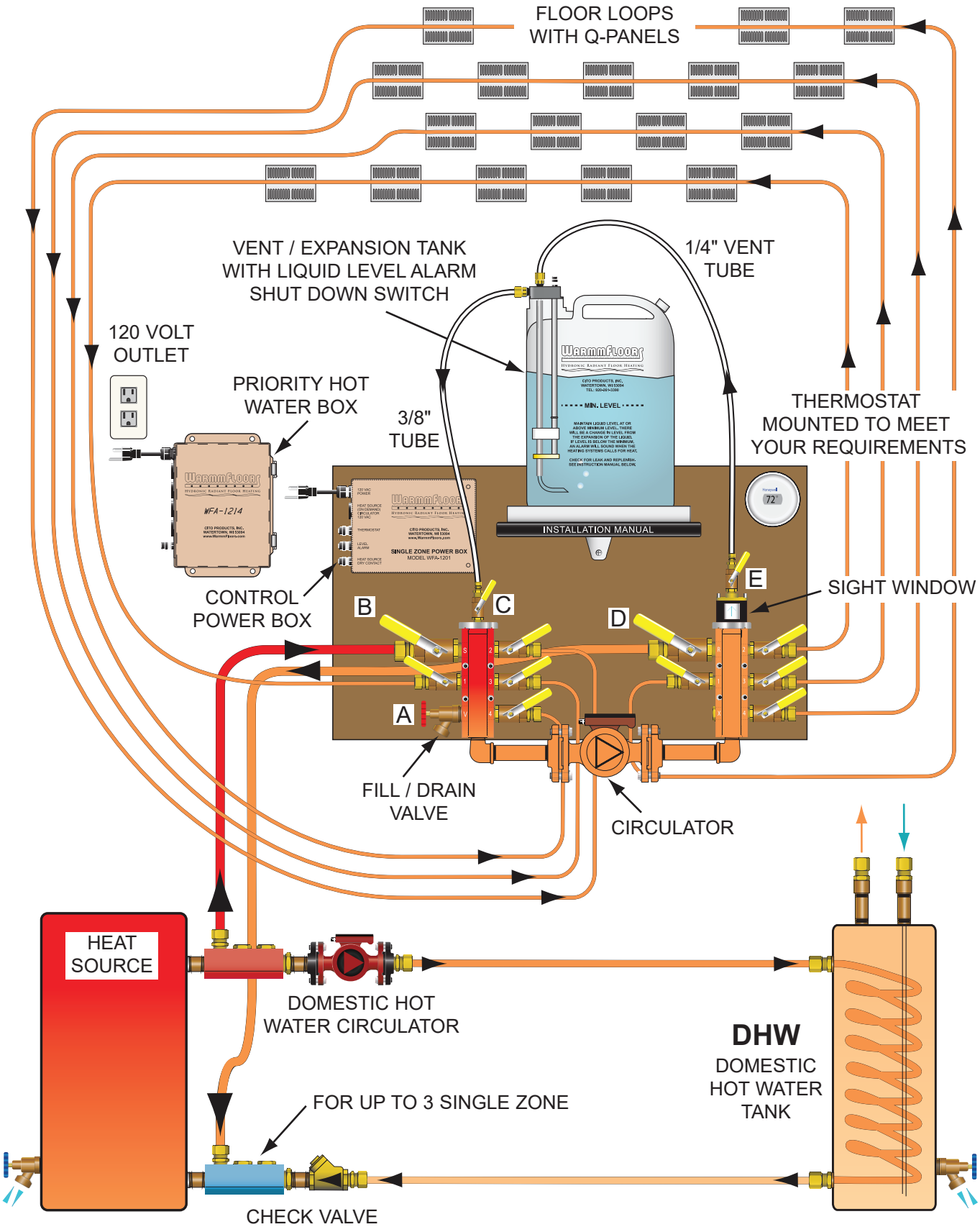

[WF-1242 Multi-Single Zone-Heating-Priority DHW-Electrical Schematic](#)
[WF-1244 Multi-Single Zone-Up to 4-Priority DHW-Diagram](#)
[WF-1246 Multi-Single Zone Controls-Heating-DHW](#)
[WF-1248 Multi Zone DHW Power Box Schematic](#)

Start Up Procedure # 4

1. Connect water supply hose to the 3/4" Fill / Drain Valve “A”. ***(If using Glycol, see page 4-4).***
2. Open all Hand Valves including: B / C / D / E
3. Open Fill Valve “A” to force water into the system until water reaches level line in Vent Tank.
4. Close Fill Valve “A” and all floor loop Hand Valves.
5. Loosen the end cap on the Circulator until water is dripping from the bottom of the plug. Close the end cap *(This provides lubrication for the bearings and cooling for the motor).*
6. **Connect the Circulator DIRECTLY to the 120 volt outlet.**
7. Open one loop with it’s corresponding Hand Valves, one at a time to purge air from the loop.
8. Open Fill Valve “A” to replenish water in the Tank.
9. Monitor progress by viewing air moving through the Sight Window. When circulator is quiet and all grumbling has stopped, close Hand Valves and proceed with the next loop.

NOTE: TO ACCELERATE THE PURGING PROCESS, SEE FILLING / PURGING ON PAGE 4-2.

10. After air has been purged, open all Hand Valves.

    After the air has been eliminated (Circulator has stopped all grumbling noise and the liquid level has remained constant) the controls are ready to be connected.

11. **Disconnect the Circulator from the 120 volt outlet.**
12. Connect the Thermostat to the Control Power Box (WF-1201).
13. Connect the Circulator (120 volt power cord) to the Control Power Box (WF-1201).
14. Connect the Control Power Box (WF-1201) to the Multiple - Single Zone Priority Hot Water Power Box (WFA-1214).
    You may connect up to 4 Single Zone WarmmFloors Systems to the Power Box.

    CHECK CONTROLS FOR PROPER OPERATION.

15. Set the temperature higher than room temperature.
    (This will pull in the control relay and supply 120 volt to circulator).
16. To check Level Alarm, pull the Tank Top Cover Assembly up and lift Float above liquid level. Audio Alarm will sound and the Circulator will shut off *(for self protection)*.
17. Set heat source temperature limit switch to the lowest temperature that meets your heat load (for best efficiency).
18. Set DHW to desired temperature (must be lower than system heat source temp).
    (When DHW temperature Thermostat is lower then set point, all WarmmFloor heating will be disabled to provide Priority Hot Water heating).

    After system operation has been established, the water treatment may be added.
    See page 4-3.

19. Set the thermostat(s) to desired room temperature and you will have Happy Warm Feet and lots of Warm Water.

Multi Zone 1 1/2" 4, 6 or 8 Zones 7/8" OD - Tubing Down

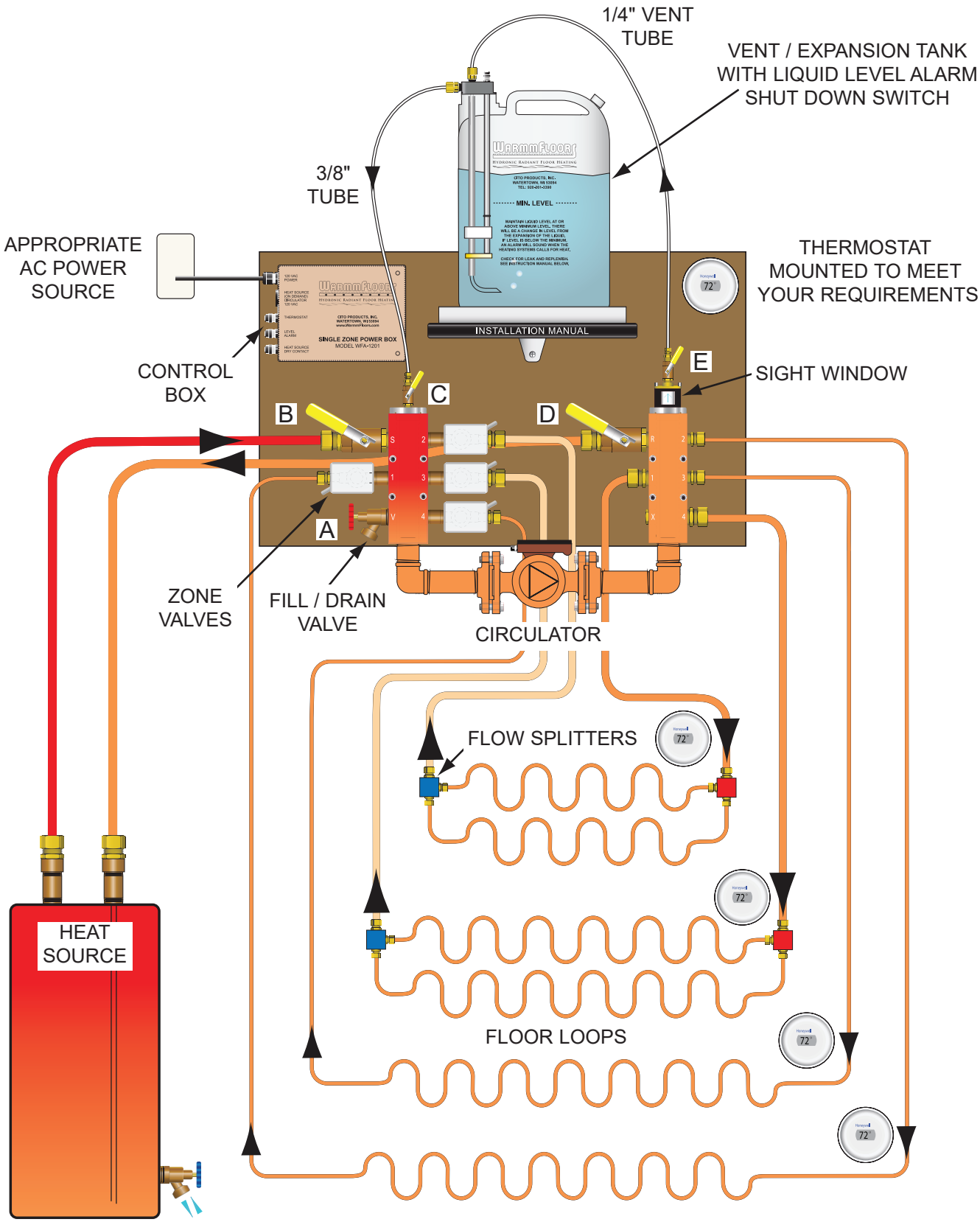

[WF-1201 or WF-2201 Single Zone Power Box - Heat Only](#)
[WF-1262 or WF-2262 Multi Zone Controller - Electrical Schematic](#)
[WF-1264 or WF-2264 Multi Zone - Controls Connection](#)

Start Up Procedure # 5

1. Connect water supply hose to the 3/4" Fill / Drain Valve “A”. ***(If using Glycol, see page 4-4).***
2. Open all Hand and Zone Valves including: B / C / D / E
   (Latch Zone Valve with lever in open position).
3. Open Fill Valve “A” to force water into the system until water reaches level line in Vent Tank.
4. Close Fill Valve “A” and all floor loop Zone Valves.
5. Loosen the end cap on the Circulator until water is dripping from the bottom of the plug.
   Close the end cap *(This provides lubrication for the bearings and cooling for the motor).*
6. **Connect appropriate AC power to Control Box (WFA-1201 120 VAC)(WFA-2201 220 VAC)**
7. Open one Zone Valve at a time to purge air from the zone.
8. Open Fill Valve “A” to replenish water in the Tank.
9. Monitor progress by viewing air moving through the Sight Window
   When the Circulator is quiet and all grumbling has stopped,
   close the Zone Valve and proceed with the next Loop.

NOTE: TO ACCELERATE THE PURGING PROCESS, SEE FILLING / PURGING ON PAGE 4-2.

10. After air has been purged, open all Zone Valves.

    After the air has been eliminated (Circulator has stopped all grumbling noise and the liquid level has remained constant) the Thermostats is ready to be connected.

11. Close all Zone Valves (Unlatch Zone Valves with lever in close position).
12. ***CONNECT AND CHECK EACH ZONE THERMOSTAT FOR PROPER OPERATION.***

    Each Thermostat must turn on its respective Valve(s) and activate the heat source.
    After each Thermostat has been checked for proper response you are ready to activate the heat source.

13. Activate heat source and set high temperature limit to the lowest temperature that meets your heat load (for best efficiency).
14. Set the temperature for one Zone, higher than room temperature.
    (This will supply the 120 volt or 220 volt AC to the Circulator) to check Level Alarm.
15. To check Level Alarm, pull the Tank Top Cover Assembly up and lift Float above liquid level.
    Audio Alarm will sound and the Circulator will shut off *(for self protection)*.

    Heat source may be connected - next to circulator - for “on demand” Summer operation (Model WFA-1201) or to a permanent 120 volt power source for continuous warm water on stand by.

16. *After system operation has been established, the water treatment must be added.*
    See page 4-3.
17. Set the Thermostat(s) to desired room temperature and you will have Happy Warm Feet.

Multi Zone 1 1/2" 4, 6 or 8 Zones 7/8" OD - Tubing Up

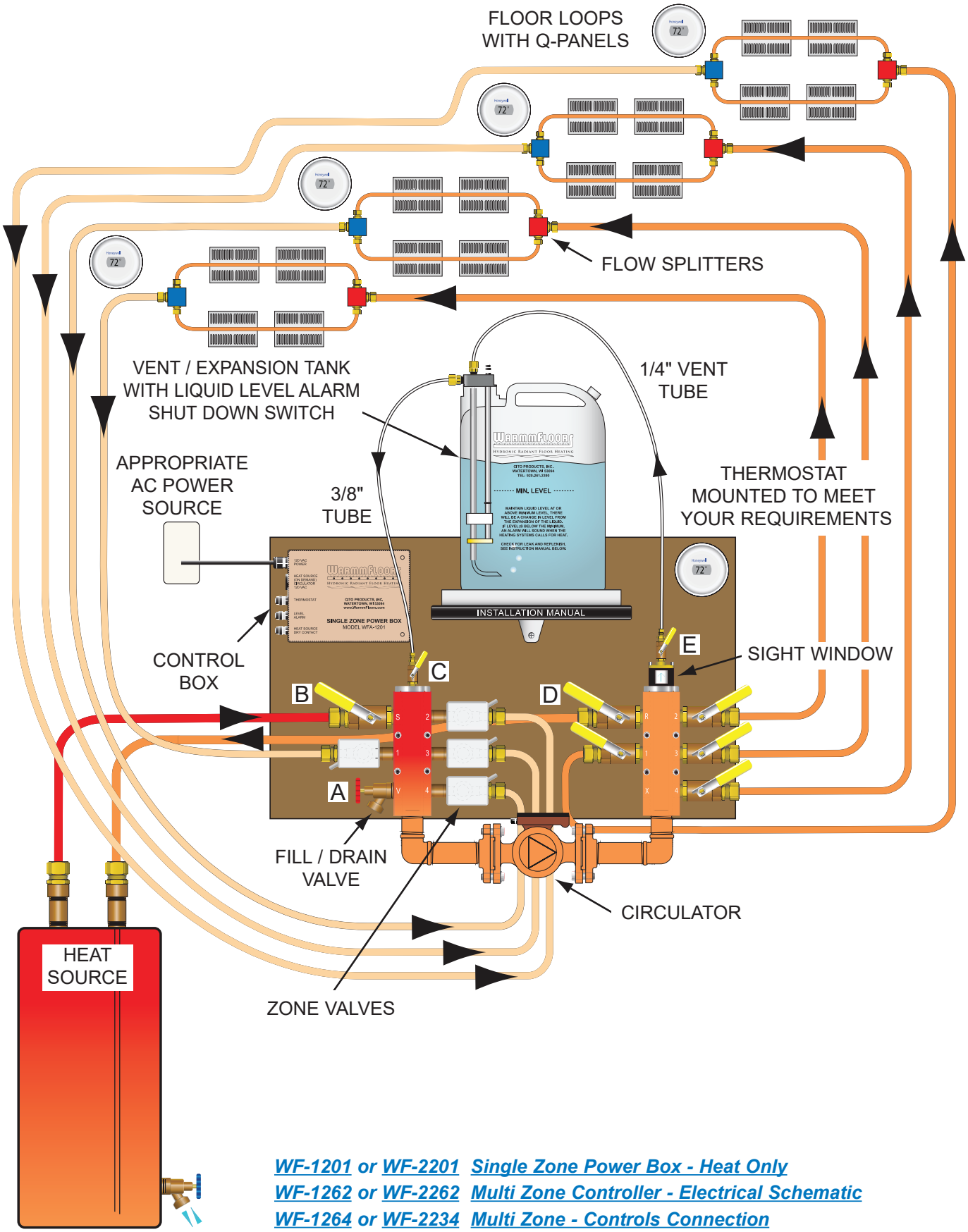

[WF-1201 or WF-2201 Single Zone Power Box - Heat Only](#)
[WF-1262 or WF-2262 Multi Zone Controller - Electrical Schematic](#)
[WF-1264 or WF-2234 Multi Zone - Controls Connection](#)

Start Up Procedure # 6

1. Connect water supply hose to the 3/4" Fill / Drain Valve “A”. ***(If using Glycol, see page 4-4).***
2. Open all Hand and Zone Valves including: B / C / D / E
   (Latch Zone Valve with lever in open position).
3. Open Fill Valve “A” to force water into the system until water reaches level line in Vent Tank.
4. Close Fill Valve “A” and all floor loop Hand and Zone Valves.
5. Loosen the end cap on the Circulator until water is dripping from the bottom of the plug. Close the end cap. *(This provides lubrication for the bearings and cooling for the motor)*.
6. **Connect appropriate AC power to Control Box (WFA-1201 120 VAC)(WFA-2201 220 VAC)**
7. Open one Zone with it’s corresponding Hand and Zone Valves, one at a time to purge air from the zone.
8. Open Fill Valve “A” to replenish water in the Tank.
9. Monitor progress by viewing air moving through the Sight Window.
   When the Circulator is quiet and all grumbling has stopped, close Hand Valve and Zone Valve, then proceed with the next Loop.

   NOTE: TO ACCELERATE THE PURGING PROCESS, SEE FILLING / PURGING ON PAGE 4-2.

10. After air has been purged, open all Hand Valves and Zone Valves.

    After the air has been eliminated (Circulator has stopped all grumbling noise and the liquid level has remained constant) the Thermostat is ready to be connected.

11. Unlatch all Zone Valves (Unlatch Zone Valves with lever in close position).
12. ***CONNECT AND CHECK EACH ZONE THERMOSTAT FOR PROPER OPERATION.***

    Each Thermostat must turn on its respective Valve(s) and activate the heat source.
    After each Thermostat has been checked for proper response, you are ready to activate the heat source.

13. Activate heat source and set high temperature limit to the lowest temperature that meets your heat load (for best efficiency).
14. Set the temperature for one Zone, higher than room temperature.
    (This will supply the 120 volt or 220 volt AC to the Circulator) to check Level Alarm.
15. To check Level Alarm, pull the Tank Top Cover Assembly up and lift Float above liquid level. Audio Alarm will sound and the Circulator will shut off *(for self protection)*.
16. ***After system operation has been established, the water treatment must be added.***
    See page 4-3.
17. Set the thermostat(s) to desired room temperature and you will have Happy Warm Feet.

Multi Zone 1 1/2" 4, 6 or 8 Zones 7/8" OD - Tubing Up / Down

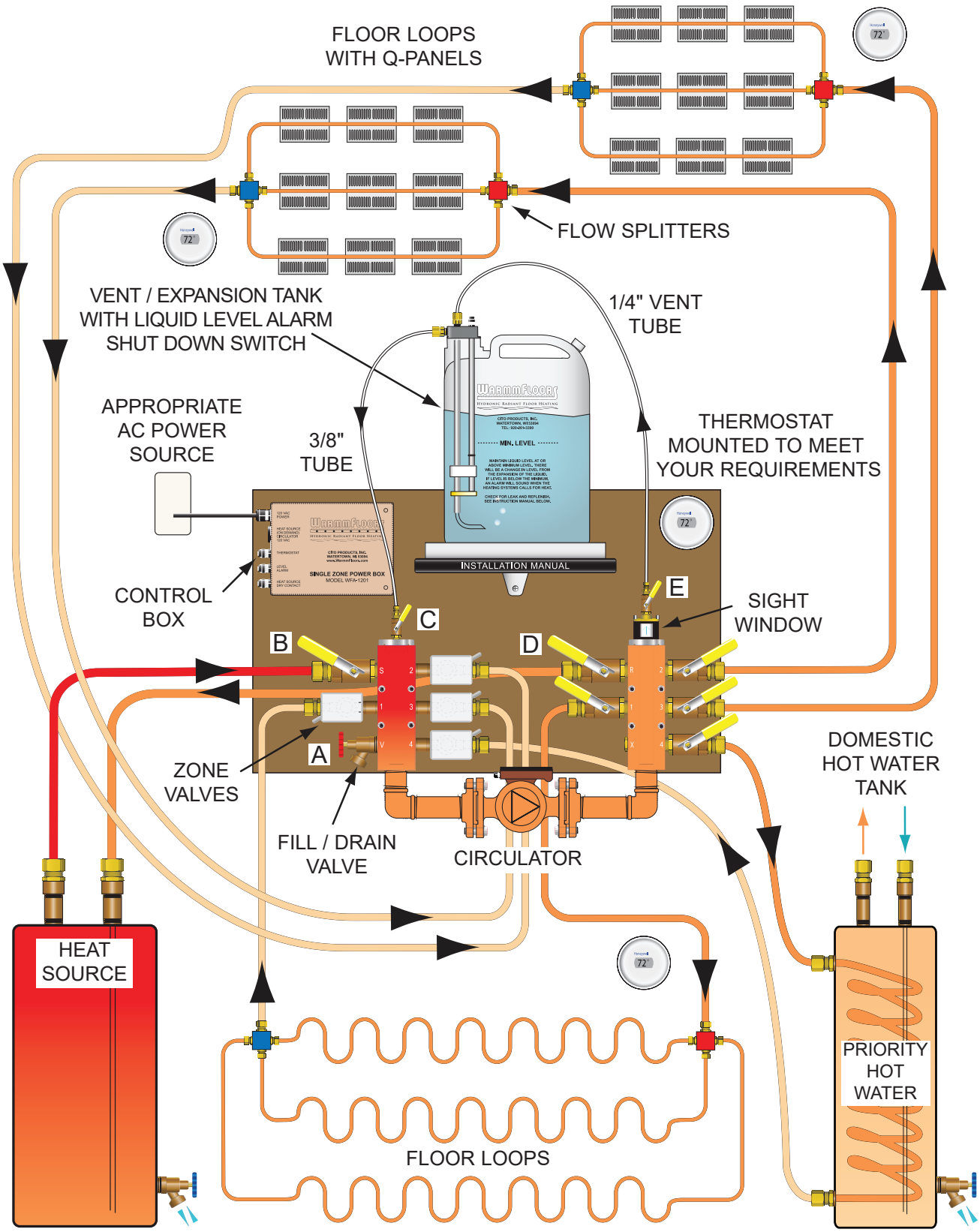

[WF-1201 or WF-2201 Single Zone Power Box - Heat Only]
[WF-1266 or WF-2266 Multi Zone Controller - DHW - Thermostat Connection]
[WF-1272 or WF-2272 Multi Zone Controller - DHW - Electrical Schematic]
[WF-1274 or WF-2274 Multi Zone Controller - DHW - Diagram]
[WF-1282 or WF-2282 Multi Zone - DHW - AC - Electric Schematic]

Start Up Procedure # 7

1. Connect water supply hose to the 3/4" Fill / Drain Valve “A”. ***(If using Glycol, see page 4-4).***
2. Open all Hand and Zone Valves including: B / C / D / E
   (Latch Zone Valve with lever in open position).
3. Open Fill Valve “A” to force water into the system until water reaches level line in Vent Tank.
4. Close Fill Valve “A” and all floor loop Hand and Zone Valves.
5. Loosen the end cap on the Circulator until water is dripping from the bottom of the plug.
   Close the end cap *(This provides lubrication for the bearings and cooling for the motor).*
6. **Connect appropriate AC power to Control Box (WFA-1201 120 VAC)(WFA-2201 220 VAC)**
7. Open one Zone with it’s corresponding Hand and Zone Valves, one at a time to purge air from the Zone.
8. Open Fill Valve “A” to replenish water in the Tank.
9. Monitor progress by viewing air moving through the Sight Window.
   When circulator is quiet and all grumbling has stopped,
   Close Hand Valve and Zone Valve and proceed with the next Loop.

   NOTE: TO ACCELERATE THE PURGING PROCESS, SEE FILLING / PURGING ON PAGE 4-2.

10. After air has been purged, open all Hand Valves and Zone Valves.

    After the Circulator has stopped all grumbling noise (air has been eliminated) and the liquid level has remained constant, the Thermostat is ready to be connected.

11. Unlatch all Zone Valves (Unlatch Zone Valves with lever in close position).
12. ***CONNECT AND CHECK EACH ZONE THERMOSTAT FOR PROPER OPERATION.***

    Each thermostat must turn on its respective Valve and activate the heat source.
    After each Thermostat has been checked for proper response you are ready to activate the heat source.

13. Activate heat source and set high temperature limit to the lowest temperature that meets your heat load (for best efficiency).
14. To check Priority Domestic Hot Water heating: The jumper wire in position on top of the circuit board, must be removed.
15. Increase the temperature on the DHW Tank to provide circulation from the water heater.
    When the DHW calls for heat, all other Valves will close during the DHW heating.
    See pages 5-20, 5-21, 5-22, 5-23, 5-24, 5-25. ***AFTER CHECKING, SET TO DESIRED TEMP.***
16. Set the temperature for one Zone, higher than room temperature.
    (This will supply the 120 volt or 220 volt AC to circulator) to check Level Alarm.
17. To check Level Alarm, pull the Tank Top Cover Assembly up and lift Float above liquid level.
    Audio Alarm will sound and circulator will shut off *(for self protection)*.
18. *After system operation has been established, the water treatment must be added.*
    See page 4-3.
19. Set the Thermostat(s) to desired room temperature and you will have Happy Warm Feet.

Electric Heating - Single Zone 1" Residential 8 Loops 5/8" OD - Tubing Down

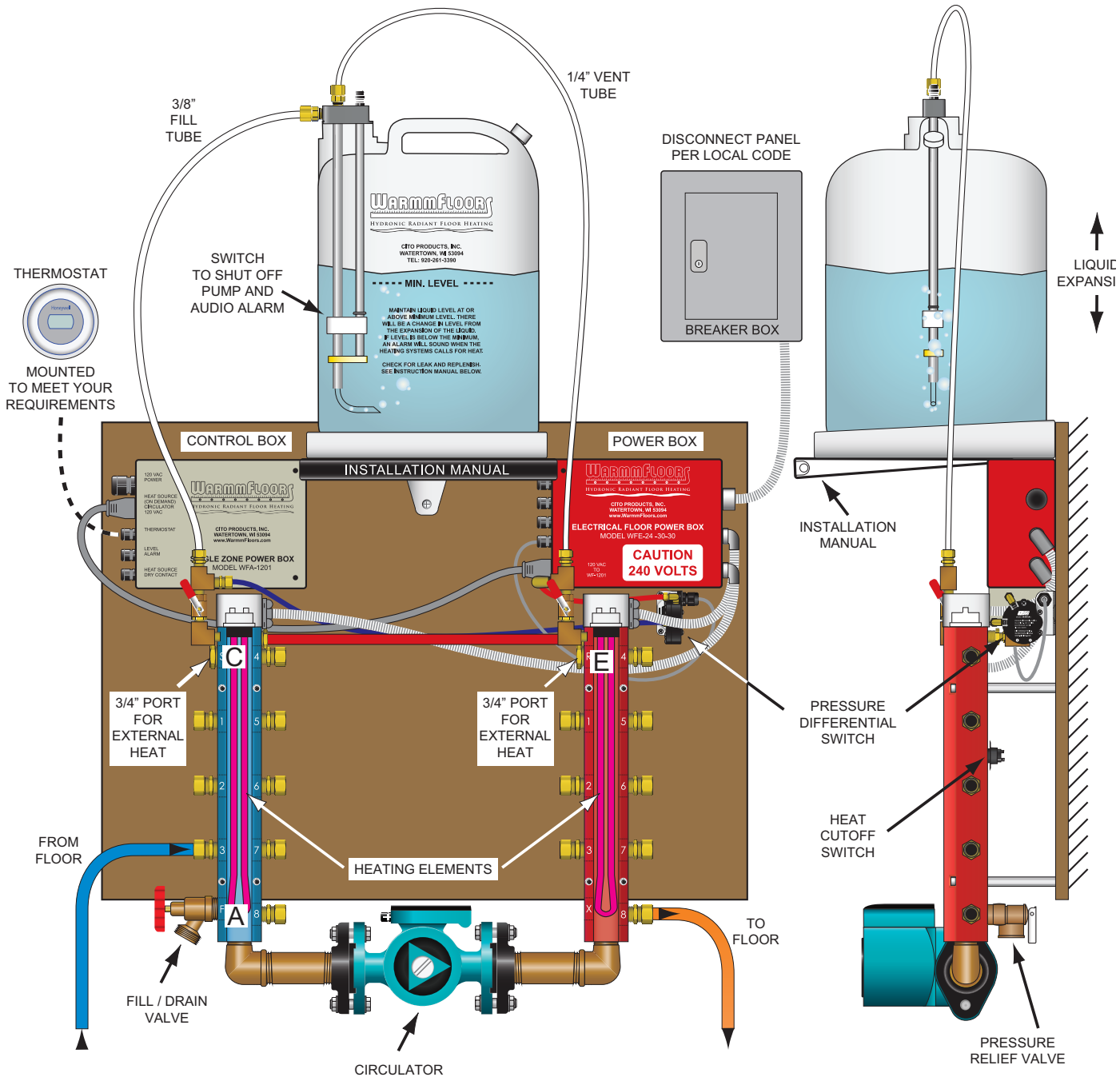

Fluid Requirement - Use distilled water with water treatment or Glycol.

WF-1201 Single Zone Power Box - Heat Only
WF-1254 Electric Heat - Electrical Schematic
WF-1256 Electric Heat - Electric Diagram
WF-1258 Electric Heat - Connection

Page 4-2 Quick Purge System with Booster Pump
Page 4-3 Filling System with Water Treatment
Page 4-4 Filling System with Glycol

CHECK THE 240 VOLT POWER RATING AND CONNECTION. The wire gauge and the circuit breaker must be installed to meet the national electric code requirement.

MODEL #	TUBING	Kw	BTU	AMP	WIRE GAUGE	BREAKER
WFE-24-5-S-38	5/8"	3.8	12,900	17	8 THWN-CU	30 @ 240 Volts
WFE-24-5-S-45	5/8"	4.5	15,360	19	8 THWN-CU	30 @ 240 Volts
WFE-24-5-S-55	5/8"	5.5	17,500	23	6 THWN-CU	40 @ 240 Volts
WFE-24-5-D-76	5/8"	7.6	25,800	34	8 THWN-CU	40 @ 240 Volts
WFE-24-5-D-90	5/8"	9.0	30,720	38	8 THWN-CU	50 @ 240 Volts
WFE-24-5-D-110	5/8"	11.0	34,500	46	6 THWN-CU	60 @ 240 Volts

DO NOT TURN ON BREAKER

1. Fill the system with **DISTILLED WATER** and water treatment: ***See page 4-3.***
   If you have an environment where freezing may occur, fill with a glycol mixture.
   See Filling Procedure, Page 4-4.
2. Open Fill / Drain Valve “A” to force water / glycol solution into the system.
3. Open Air Vent Valve C (3/8" tube) and E (1/4" tube).
4. Fill until water reaches level line in the Vent Tank, then close the Fill / Drain Valve “A”.
5. Loosen the end cap on the Circulator until water is dripping from the bottom of the plug. *(This provides lubrication for the bearings and cooling for the motor)*. Close the end cap.
6. **Connect the Circulator DIRECTLY to the 120 volt outlet.**
7. Observe air escaping in the Expansion Tank.
8. As the air escapes the system, adding water is required with the Fill / Drain Valve “A”.

   NOTE: TO ACCELERATE THE PURGING PROCESS, SEE FILLING / PURGING ON PAGE WF-4-4

   After the air has been eliminated (Circulator has stopped all grumbling noise and the liquid level has remained constant) the power may be supplied to the heater.
9. **Disconnect the Circulator from the 120 volt outlet.**
10. Connect the Thermostat to the Single Zone Power Box (WFA-1201).
11. Connect the Circulator to the Single Zone Power Box (WFA-1201).
12. Connect the Single Zone Power Box (WFA-1201) to the Line Power Box (WFE-1260).
13. Set the Thermostat temperature higher than room temperature.

    Observe: Circulator will start up (listen for noise and/or feel movement).
14. To check Level Alarm, pull the Tank Top Cover Assembly up and lift Float above liquid level. Audio Alarm will sound and the Circulator will shut off *(for self protection)*.

    ACTIVATE HEATERS
15. Turn on the Power Box Breaker.
    There will be a temperature rise from the Blue Manifold to the Red Manifold. Typically greater than 10 degrees F.
16. Set the Thermostat(s) to desired room temperature and you will have Happy Warm Feet!

Hydronic Addition

Model# WFL-S-T-4-5

Temperature reducing assembly for floor heating

Rating: 4 Loops up to 250' per loop
22,000 BTU's (@ 4.7 GPM @ 20° F △ t delivery)

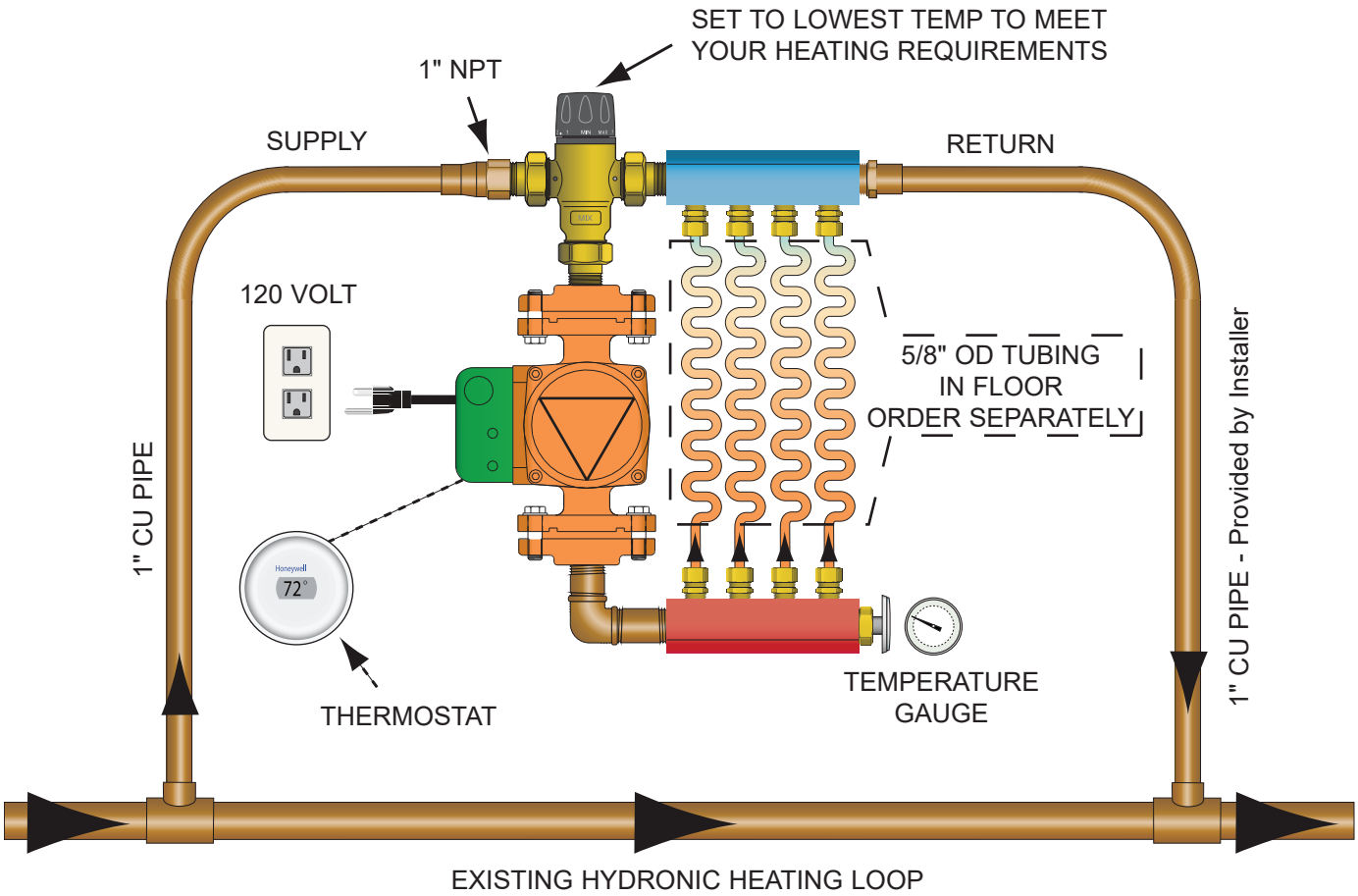

OPTIONAL

Floor Sensing Thermostat
(This will allow Thermostat to be mounted in any remote location).

ITEM	PART #
Thermostat with Remote Sensor	***WFM-8400***
25' Floor / Wall Sensor only	***WFM-8025***
50' Floor / Wall Sensor only	***WFM-8050***

Start Up Procedure # 9

1. The loop controller requires draining of the system.
2. Upon completion of the installation, the system may be filled and all air may be purged via the existing Purge Valve.
3. After the system has been filled and pressurized, the Circulator may be connected to a 120 v power outlet.
4. Set your Thermostat to the desired level.
5. Set your loop Temperature Valve to the lowest setting for comfort.
6. That will satisfy your heating requirement.

Primary Loop - Single Zone - First Floor Layout

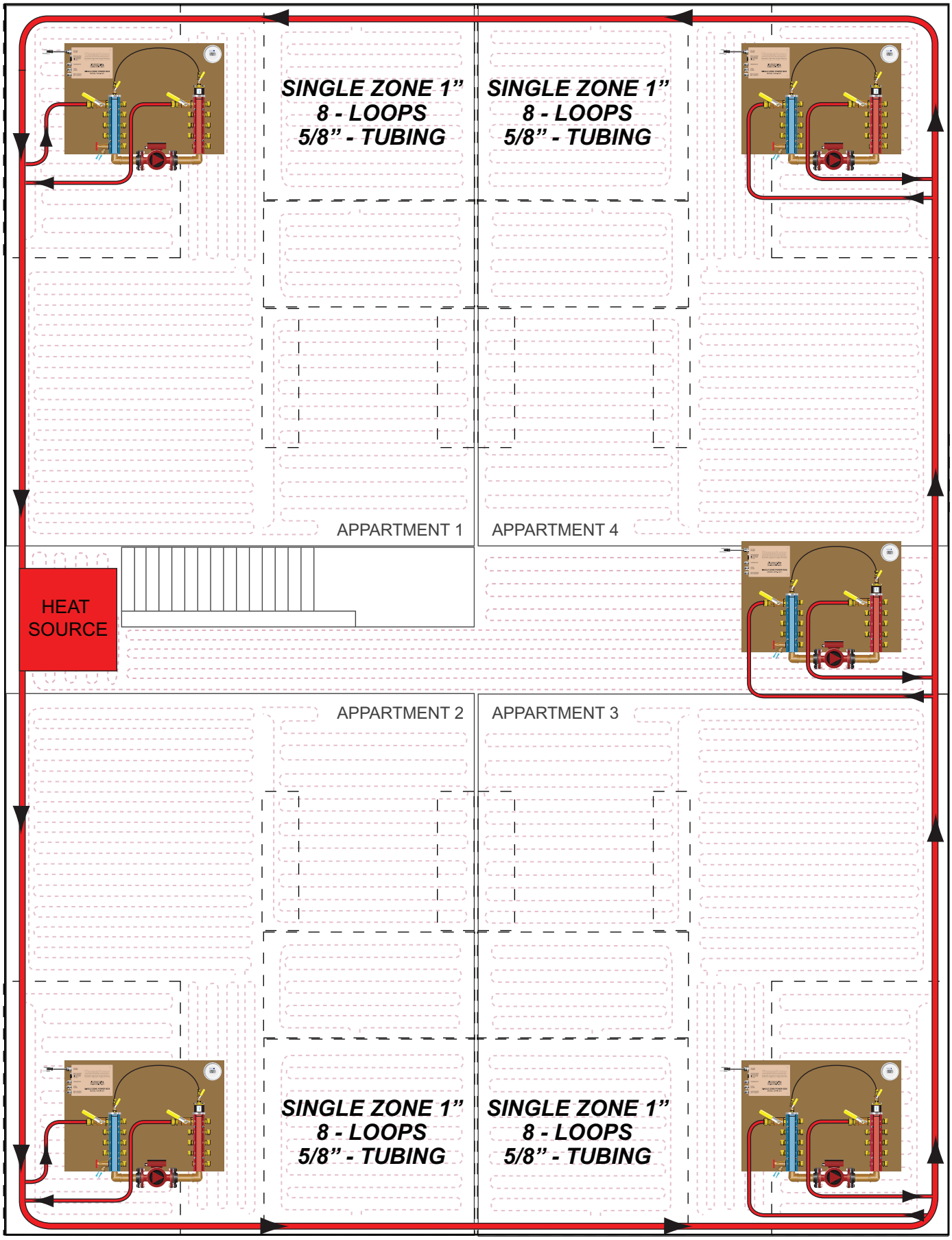

Primary Loop - Single Zone - First Floor Layout

For Commercial and Industrial application:

- Offices
- Child Care Centers
- Cafeterias
- Hotel Lobbies
- Gymnasium
- Factory Buildings
- Heated Warehouses
- Aircraft Hangers
- Nursing Homes

Principle of Operation
A single heat source may be used to provide the heating for single or multiple levels.

The primary loop temperature may be controlled to limit the energy allocated for each zone.

If any thermostat calls for heat, the respective thermostat will activate the circulator and disperce the heat. If an area needs not to be heated (accupants option) a manual hand valve may be installed to reduce or eliminate heating in the respective area.

Any number of thermostats (zones) may be calling for heat and draw heat from the primary loop until the desired room temperature is reached and maintained.

Heat source:
The heat source is sized for the combined heat load for all zones.
The energy allowed for each may be limited by the heat source temperature that is controlled and proportioned to the outside temperature. The primary loop must me designed to maintain a min flow velocity of 2'/sec. to transport any air trapped in the system.

The heat source shall have the following specification:

1 - Expansion Tank
2 - Automatic System Pump for make up water
3 - Liquid Make Up Tank with Low Level shut down and Audio Alarm
4 - Automatic Vent - Terminating into the make up water tank

...Continued on page 3-24

Primary Loop - Single Zone - Second Floor Layout

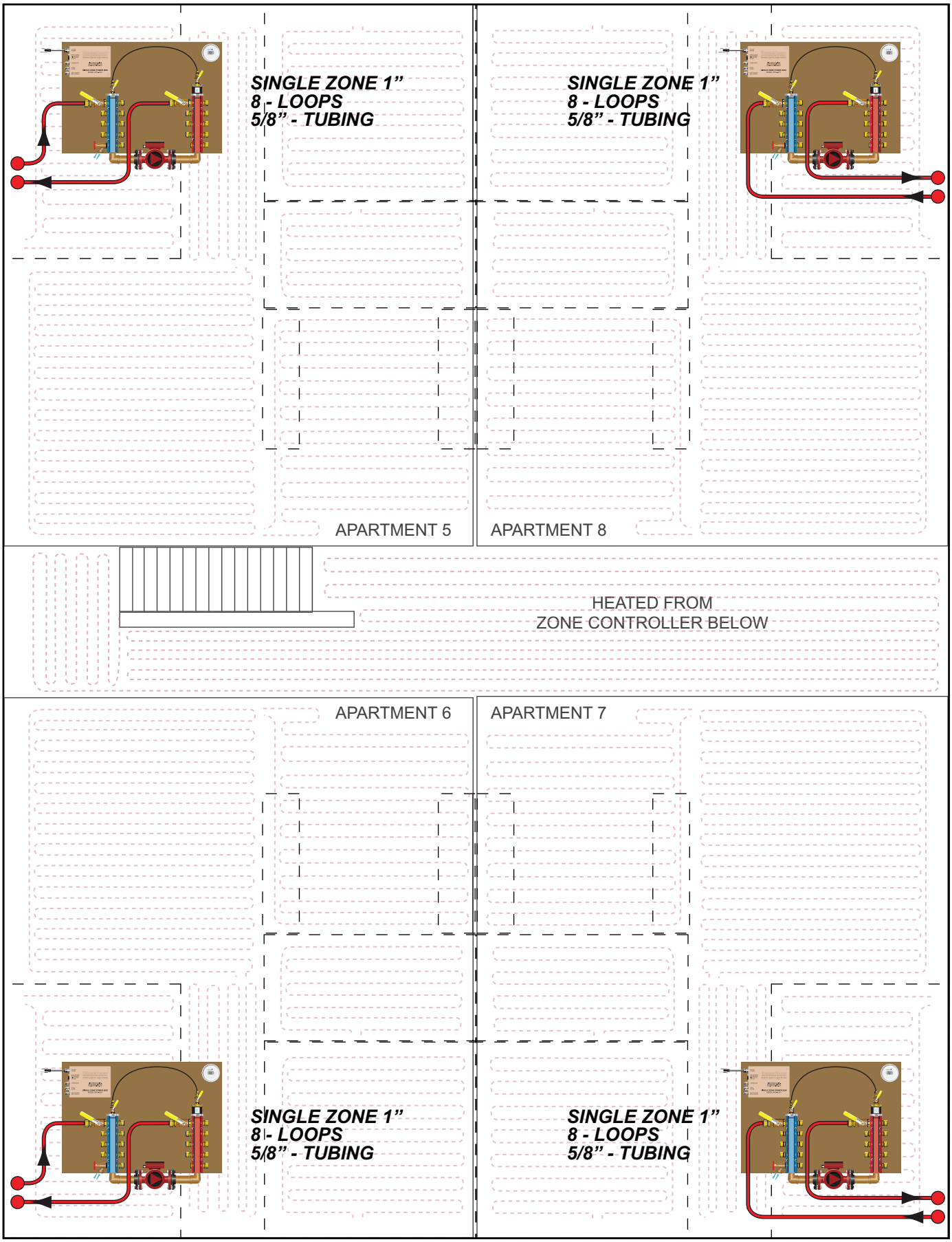

Heat Upon Demand

The heat source may be connected to remain “cold” and provide heat upon demand. This will automatically provide heat where you have a climate change (shut down during warm spells).

To allow other zones to obtain heat, a “master” zone activates the heat source. A delay timer can be set for a predetermined time that maintains the heat source active. This allows other loops to draw energy as needed and eliminates unwanted heat loss due to poor household management (doors and windows open and heater running).

Continuous Heat Source

The heat source may be connected to remain “hot” and provide heat at any time. The primary heat loop circulator will circulate the fluid 24/7. This will provide instant heat, however, it will not automatically shut off during warm spells. Since the energy consumption will be higher, there will be intrinsic heat loss even when none of the zones call for heat.

Thermostat - Temperature Control - User Accessible

Each zone is controlled with a thermostat that may be located in the respective area. The position shall be in an area that will be away from a draft and direct sunshine.

Temperature Control - Tamper Proof

A Remote Sensor may be installed to provide the temperature sensing for each zone. The thermostat may be located in a “secure area” away from general access, such as in the utility room.

Primary Heat Supply Loop

A single “primary” loop may be used to supply multiple levels. The primary loop may be located in the ceiling for the floor above and the floor below.

Loop Lengths

Loop length is designed with the following consideration:

Single Circulator	5/8" Tubing - up to 300'	Single Circulator	7/8" Tubing - up to 500'
Dual Circulator	5/8" Tubing - up to 500'	Dual Circulator	7/8" Tubing - up to 1000'

To compensate for higher heat loss, such as the north side of a building, a shorter loop length may be installed to increase the fluid velocity as well as the heat delivery.